CONNECTOR

KJ5106

(R-106)

SALA Detachable, Steel “Ladder hook” connector for use with fall arrest equipment.

Description

Sala connectors ensure there are no weak links in the worlds premier safety systems.

This “ladder hook” can be attached to spliced or webbing lanyards, and other PPE products. It is supplied with a fixing pin, which allows it to be semi permanently attached to equipment. This stops it from accidentally becoming detached or lost, and insures correct loading.

Its opening of 33mm makes it ideal for ladder climbing, or larger anchorage points.

Main features

- Alloy steel construction
- Large opening 33mm ideal larger anchorages
- Automatic closing and locking
- Double action security
- Quick and easy to open with one hand
- Easily used by left and right handed persons
- Semi permanent attachment eye
- Marked with Batch reference for easier quality assurance traceability.

Applications

Specially adapted to easily make connections to anchorage points up to 33mm in diameter.

Ideally suited for work in the following areas:-

- Mast tower work
- Structural steel
- Ladder climbing

Associated Products

Can be used in association with:-

KE5175R Splices rope lanyard
KE5125W, KE5175W Webbing lanyard
KE5125X, KE5175X Expander lanyard

KD1TALONHN
Talon webbing retractable fall arrest device 3m.

KD100/2
Lightweight webbing retractable fall arrest device 2.5m.

Capital Safety Group reserves the right to modify the specification of this product without prior notice. Descriptions, colours, pictures and diagrams herein appear for guidance only.-

capital
Capital Safety Group **www.capitalsafety.com**
France **Tel** +33 (0)4 97 10 00 10 **Email** information@capitalsafety.com
UK **Tel** +44 (0)1928 571 324 **Email** info@csgne.co.uk

CONNECTOR

KJ5106

(R-106)

SALA Detachable, Steel “Ladder hook” connector for use with fall arrest equipment.

Technical specification

- Body material – Alloy steel
- Gate and locking mechanism - Alloy steel
- Surface finish – Zinc plated with yellow passivation
- Gate opening – 33mm
- Available space under captive pin – diameter 20mm
- Height – 170mm
- Width – 95mm
- Net Weight - 547g
- CE marked – Yes
- Conforms to standard – EN362
- Breaking Strength – 45kN
- Marking - Quality control batch reference
- Marked - breaking Strength

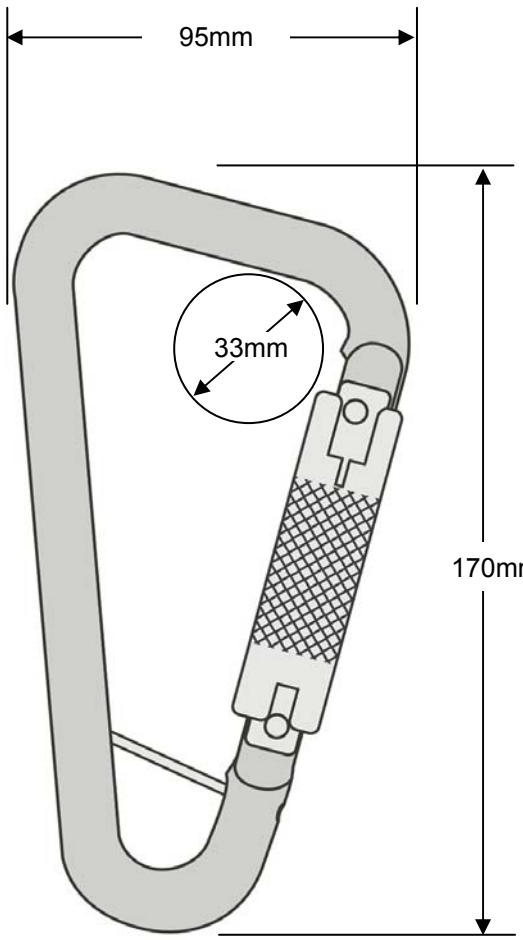

Options

KJ50645
Lightweight detachable aluminium scaffold hook with 60mm opening.

KJ5108
Detachable steel scaffold hook with 50mm opening. High Breaking strength 30kN

Capital Safety Group reserves the right to modify the specification of this product without prior notice. Descriptions, colours, pictures and diagrams herein appear for guidance only.

capital
Capital Safety Group **www.capitalsafety.com**
France **Tel** +33 (0)4 97 10 00 10 **Email** information@capitalsafety.com
UK **Tel** +44 (0)1928 571 324 **Email** info@csgne.co.uk